Connectors (Europe)

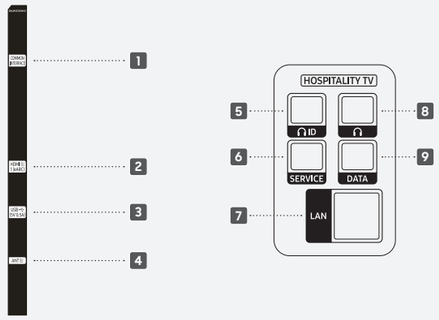

1 COMMON INTERFACE
2 HDMI IN1 (eARC)
3 USB (5V 0.5A)
4 ANT IN
5 HEADPHONE ID
6 SERVICE
7 LAN
8 HEADPHONE
9 DATA

Connectors (Taiwan)

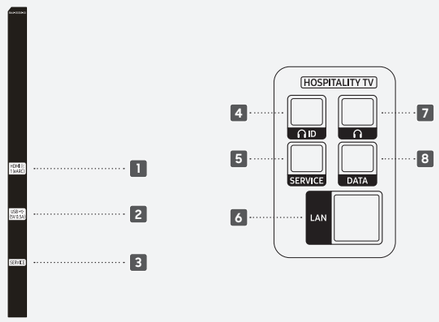

1 HDMI IN1 (eARC)
2 USB (5V 0.5A)
3 SERVICE
4 HEADPHONE ID
5 SERVICE
6 LAN
7 HEADPHONE
8 DATA



Hospitality Display

HU7000F series

Enrich guest stays with seamless entertainment

- 4K Smart Hospitality TV with LINK Cloud

Experience stunning 4K UHD clarity with vibrant colors and lifelike details, enhanced by advanced upscaling and a sleek metal design. Perfect for hotels, the HU7000F features Tizen OS and LYNK Cloud for seamless management while also providing effortless casting options with Google Cast™ and AirPlay to create a unique experience for each guest.

Key features

LYNK Cloud

LYNK Cloud provides remote display management and can even analyze guests' content use to uncover marketing insights.

* Samsung LYNK Cloud solution must be purchased separately.
* UI may vary by models or hotel's current platforms.

Google Cast

Guests will be able to easily cast their favorite content directly from their Android™ and iOS devices to the TV without the need for additional dongles or login requirements.

* The features are available through Samsung solution. (LYNK Cloud, TEP)
* Android and Google Cast are trademarks of Google LLC.
* Google Cast supports Android 6 and above, and iOS 14 and above. Availability may vary by device, software version and region.
* Google Cast is supported on HU8000F/HU7000F series.

Apple AirPlay

Enjoy movies, shows, photos and more on the TV in your room with AirPlay. Your devices are securely paired to the TV, ensuring peace of mind that everything stays personal and private.

* When using TEP, In order to enable AirPlay, all related parties including hotel property and system integrator must be certified by Apple separately.
* AirPlay in hotels requires iPhone Xs or later running iOS 17.3 or later; or iPad (6th generation or later), iPad mini (5th generation or later), iPad Air (3rd generation or later), 12.9-inch iPad Pro (2nd generation or later), 10.5-inch iPad Pro, or 11-inch iPad Pro (1st generation or later) running iPadOS 17.3 or later.
* This function may not be supported depending on the model, apps, or geographical area.

Samsung Knox Security

Samsung Knox Security secures against harmful attacks by automatically block execution of unauthorized malicious apps or access to phishing sites, and guests' sensitive data such as pin codes or passwords are protected by multiple layers of software and hardware.

* Samsung Knox Security applies to Samsung TVs powered by Tizen®, launched since 2015. Latest software update is required.

About Samsung Electronics Co., Ltd.

Samsung Electronics Co., Ltd. inspires the world and shapes the future with transformative ideas and technologies. The company is redefining the worlds of TVs, smartphones, wearable devices, tablets, digital appliances, medical equipment, network systems, and semiconductor and LED solutions. For the latest news, please visit the Samsung Newsroom at news.samsung.com.

Samsung Hospitality Display

For more information about Samsung Smart Signage, visit www.samsung.com/business

Copyright © 2025 Samsung Electronics Co. Ltd. All rights reserved. Samsung is a registered trademark of Samsung Electronics Co. Ltd. Specifications and designs are subject to change without notice. Non-metric weights and measurements are approximate. All data were deemed correct at time of creation. Samsung is not liable for errors or omissions. All brand, product, service names and logos are trademarks and/or registered trademarks of their respective owners and are hereby recognized and acknowledged.

Samsung Electronics Co., Ltd.
129, Samsung-ro, Yeongtong-gu, Suwon-si, Gyeonggi-do, 16677 Republic of Korea

2025-07

Specifications

Model		43"	50"	55"	65"	75"
General Information	Product Type	LED	LED	LED	LED	LED
	Inch	43	50	55	65	75
	Resolution	4K (3,840 x 2,160)	4K (3,840 x 2,160)	4K (3,840 x 2,160)	4K (3,840 x 2,160)	4K (3,840 x 2,160)
Video	Picture Engine	Quantum Processor Lite	Quantum Processor Lite	Quantum Processor Lite	Quantum Processor Lite	Quantum Processor Lite
	HDR (High Dynamic Range)	HDR	HDR	HDR	HDR	HDR
	HDR10+	Support	Support	Support	Support	Support
	HLG (Hybrid Log Gamma)	Yes	Yes	Yes	Yes	Yes
	Contrast	Mega Contrast	Mega Contrast	Mega Contrast	Mega Contrast	Mega Contrast
	Color	Dynamic Crystal Color	Dynamic Crystal Color	Dynamic Crystal Color	Dynamic Crystal Color	Dynamic Crystal Color
	Micro Dimming	UHD Dimming	UHD Dimming	UHD Dimming	UHD Dimming	UHD Dimming
	Contrast Enhancer	Yes	Yes	Yes	Yes	Yes
	Film Mode	Yes	Yes	Yes	Yes	Yes
Audio	Speaker Type	2CH	2CH	2CH	2CH	2CH
	Main Speaker Output (W)	10W+10W	10W+10W	10W+10W	10W+10W	10W+10W
	Woofer Speaker Output (W)	N/A	N/A	N/A	N/A	N/A
	Bluetooth Audio	Yes	Yes	Yes	Yes	Yes
Smart Service	Operating System	Tizen™ Smart TV	Tizen™ Smart TV	Tizen™ Smart TV	Tizen™ Smart TV	Tizen™ Smart TV
	Web Browser	Yes	Yes	Yes	Yes	Yes
	SmartThings Pro	Yes	Yes	Yes	Yes	Yes
VESA Standard	Screw Size	M8	M8	M8	M8	M8
	Screw depth	23-25	23-25	23-25	23-25	10-12
	VESA Spec	200 x 200	200 x 200	200 x 200	200 x 200	400 x 300
Smart Feature	Multi View	Yes	Yes	Yes	Yes	Yes
	Ambient Mode	Yes	Yes	Yes	Yes	Yes
	Workspace	Yes	Yes	Yes	Yes	Yes
	Apple AirPlay	Yes	Yes	Yes	Yes	Yes
	Google Cast	Yes	Yes	Yes	Yes	Yes
Feature	Art Mode	N/A	N/A	N/A	N/A	N/A
	ConnectShare™	Yes	Yes	Yes	Yes	Yes
	EPG	Yes	Yes	Yes	Yes	Yes
	IP Control	Yes	Yes	Yes	Yes	Yes
Hospitality Feature	TEP	Yes	Yes	Yes	Yes	Yes
	Samsung LYNK Cloud	Yes	Yes	Yes	Yes	Yes
	Hospitality Plug&Play (Easy Setup)	Yes	Yes	Yes	Yes	Yes
	Power On Mode	Yes	Yes	Yes	Yes	Yes
	Hotel Channel List	Yes	Yes	Yes	Yes	Yes
	Channel Menu Display	Yes	Yes	Yes	Yes	Yes
	Mixed Channel List (ATSC, DVB-T/T2/C/S2, Analog)	Yes	Yes	Yes	Yes	Yes
	My Channel	Yes	Yes	Yes	Yes	Yes
	Energy Saving Mode (BLU control)	Yes	Yes	Yes	Yes	Yes
	Interactive Protocol	Yes	Yes	Yes	Yes	Yes
	Multi Code Remote control	Yes	Yes	Yes	Yes	Yes
	USB Cloning	Yes	Yes	Yes	Yes	Yes
	Hostspot	Yes	Yes	Yes	Yes	Yes
	Alarm	Yes	Yes	Yes	Yes	Yes
	Samsung LYNK™ DRM RF	Yes	Yes	Yes	Yes	Yes
	Samsung LYNK™ DRM IP	Yes	Yes	Yes	Yes	Yes
	bLAN	N/A	N/A	N/A	N/A	N/A
	Security Mode	Yes	Yes	Yes	Yes	Yes
	Pro:Idiom SW	Yes	Yes	Yes	Yes	Yes

Model		43"	50"	55"	65"	75"
	Wi-Fi	Yes (Wi-Fi 5)	Yes (Wi-Fi 5)	Yes (Wi-Fi 5)	Yes (Wi-Fi 5)	Yes (Wi-Fi 5)
	Bluetooth	Yes (BT5.2)	Yes (BT5.2)	Yes (BT5.2)	Yes (BT5.2)	Yes (BT5.2)
	HDMI	1	1	1	1	1
	Anynet+ (HDMI-CEC)	Yes	Yes	Yes	Yes	Yes
	USB	1 x USB-A	1 x USB-A	1 x USB-A	1 x USB-A	1 x USB-A
	Ethernet (LAN)	1	1	1	1	1
	Audio Out (Mini Jack / LR)	N/A	N/A	N/A	N/A	N/A
	Digital Audio Out (Optical)	N/A	N/A	N/A	N/A	N/A
	RF In (Terrestrial / Cable input / Satellite Input)	1/1 (Common Use for Terrestrial)/0	1/1 (Common Use for Terrestrial)/0	1/1 (Common Use for Terrestrial)/0	1/1 (Common Use for Terrestrial)/0	1/1 (Common Use for Terrestrial)/0
Connectivity	Ex-Link (RS-232C)	1	1	1	1	1
	CI Slot	N/A (EU : Yes)	N/A (EU : Yes)	N/A (EU : Yes)	N/A (EU : Yes)	N/A (EU : Yes)
	Pillow Speaker Jack	N/A	N/A	N/A	N/A	N/A
	Variable Audio Out	Yes	Yes	Yes	Yes	Yes
	Variable Audio Out Volume Control	Yes	Yes	Yes	Yes	Yes
	Video Out	N/A	N/A	N/A	N/A	N/A
	DATA	Yes	Yes	Yes	Yes	Yes
	Headphone	Yes	Yes	Yes	Yes	Yes
	Headphone ID	Yes	Yes	Yes	Yes	Yes
	Ethernet Bridge (LAN-Out)	N/A	N/A	N/A	N/A	N/A
Design	Design	Design	Design	Design	Design	Design
	Stand Type	BASIC FEET	BASIC FEET	BASIC FEET	BASIC FEET	BASIC FEET
* Power	Power Supply (V)	AC220-240V~ 50/60Hz	AC220-240V~ 50/60Hz	AC220-240V~ 50/60Hz	AC220-240V~ 50/60Hz	AC220-240V~ 50/60Hz
	Power Consumption (Max) (W)	110	120	125	170	220
	Power Consumption (Energy Saving Mode) (W)	N/A	N/A	N/A	N/A	N/A
	Power Consumption (Stand-by) (W)	0.5	0.5	0.5	0.5	0.5
	Power Consumption (Typical)	N/A	N/A	N/A	N/A	N/A
Dimension (W x H x D)	Set Size without Stand (W x H x D) (mm)	957.8 x 558.8 x 76.3	1,110.8 x 643.8 x 76.4	1,224.6 x 707.8 x 76.6	1,444.1 x 831.2 x 76.8	1,668.1 x 957.8 x 77
	Set Size with Stand (W x H x D) (mm)	957.8 x 609 x 157	1,110.8 x 695.1 x 199	1,224.6 x 759.1 x 199	1,444.1 x 882.2 x 222	1,668.1 x 1,005.9 x 280
	Package Size (W x H x D) (mm)	1,065 x 635 x 118	1,228 x 743 x 127	1,354 x 810 x 127	1,578 x 930 x 142	1,820 x 1,100 x 164
Weight	Set Weight without Stand (kg)	6.4	8.3	9.6	14.2	22.4
	Set Weight with Stand (kg)	6.6	8.6	9.9	14.5	22.8
	Package Weight (kg)	9.0	12.0	14.0	20.5	31
Accessory	Remote Controller Model	TM2240A	TM2240A	TM2240A	TM2240A	TM2240A
	Batteries (for Remote Control)	Yes (AAA battery*2ea)	Yes (AAA battery*2ea)	Yes (AAA battery*2ea)	Yes (AAA battery*2ea)	Yes (AAA battery*2ea)
Component	User Manual	Yes	Yes	Yes	Yes	Yes
	Power Cable	Yes	Yes	Yes	Yes	Yes
Hospitality Accessory	Quick Install Guide	Yes	Yes	Yes	Yes	Yes
	Data Cable	Yes	Yes	Yes	Yes	Yes

* Figures may vary by region.

Technical drawings

43″

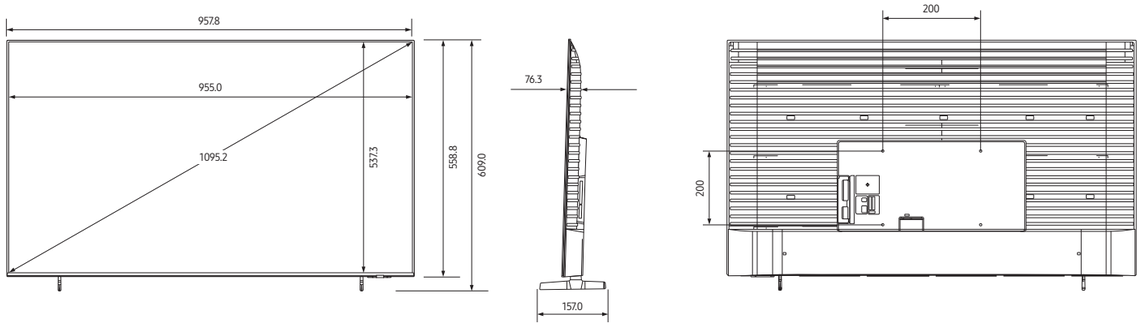

50″

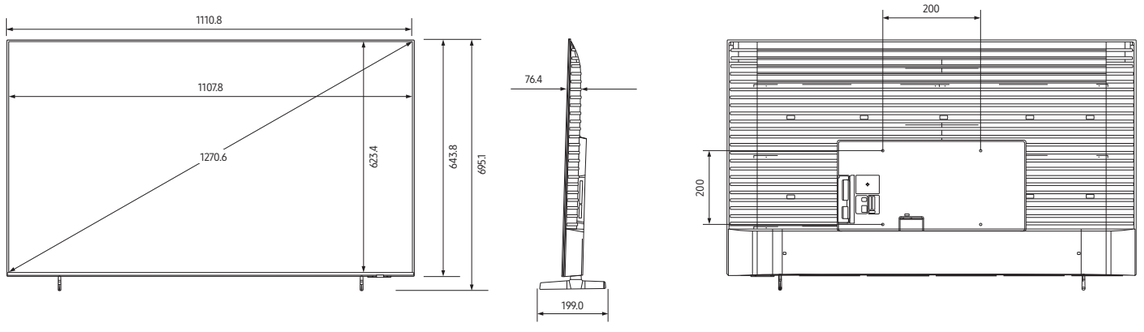

55″

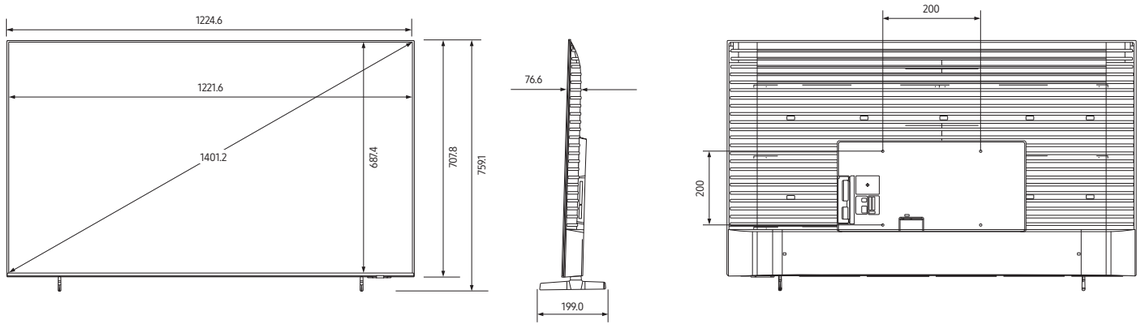

65″

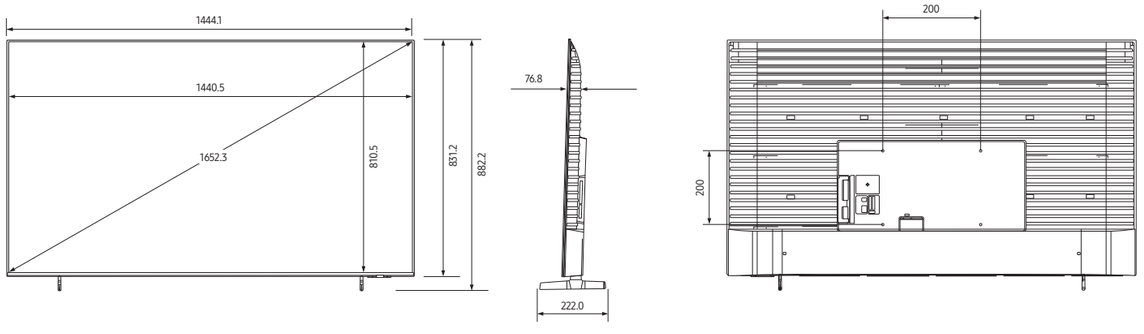

75″

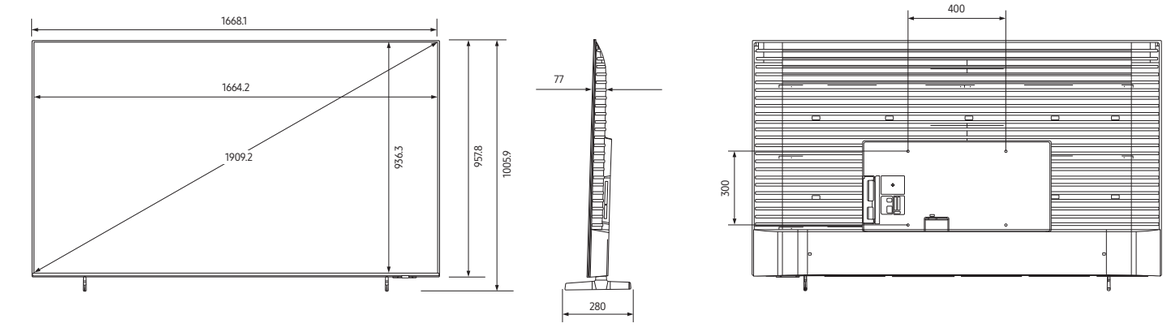

Connectors (Korea)

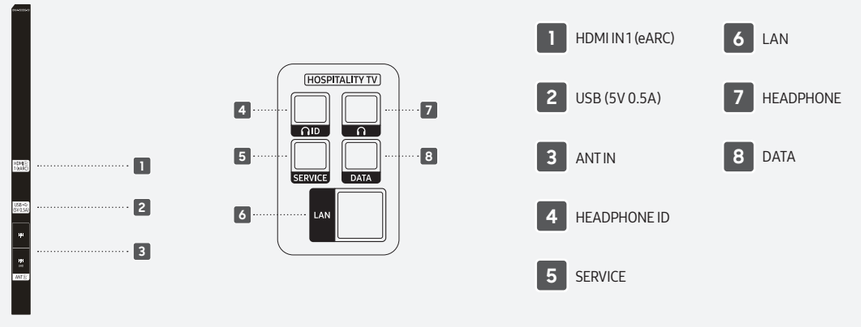

1 HDMI IN 1 (eARC)
2 USB (5V 0.5A)
3 ANT IN
4 HEADPHONE ID
5 SERVICE
6 LAN
7 HEADPHONE
8 DATA

Connectors (New zealand)

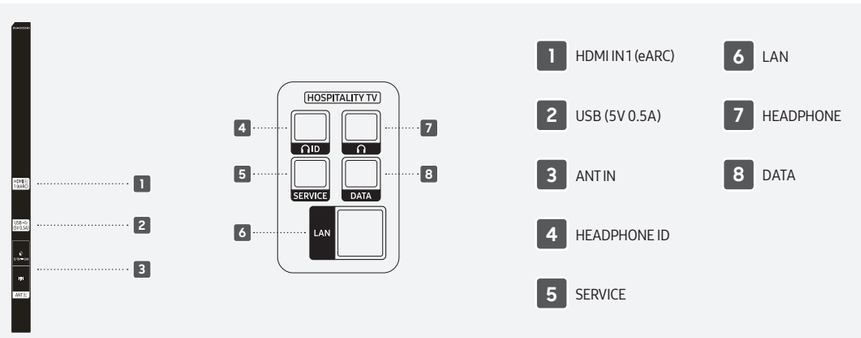

1 HDMI IN 1 (eARC)
2 USB (5V 0.5A)
3 ANT IN
4 HEADPHONE ID
5 SERVICE
6 LAN
7 HEADPHONE
8 DATA

Connectors (Türkiye)

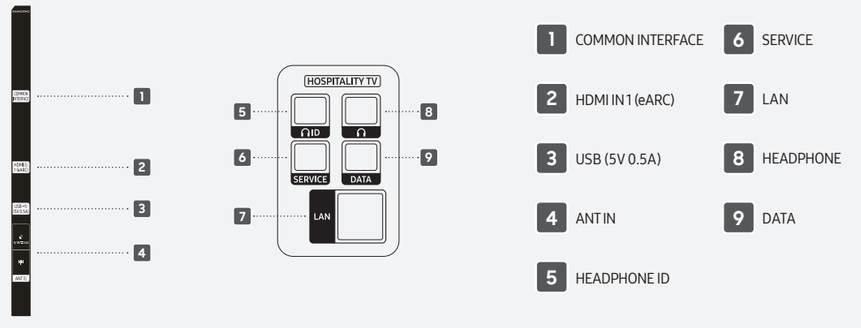

1 COMMON INTERFACE
2 HDMI IN 1 (eARC)
3 USB (5V 0.5A)
4 ANT IN
5 HEADPHONE ID
6 SERVICE
7 LAN
8 HEADPHONE
9 DATA